Silicon NPN Epitaxial

2SD2115S

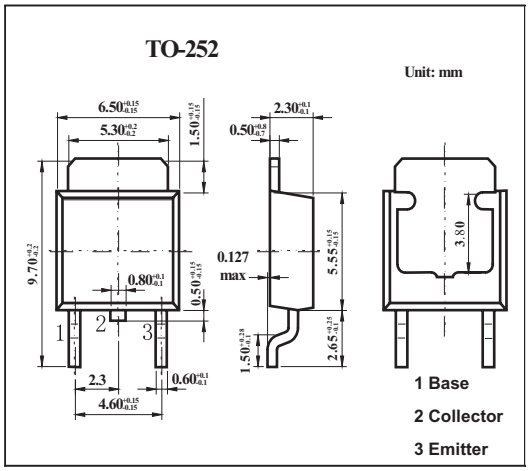

Features

- Low frequency power amplifier.

Absolute Maximum Ratings Ta = 25℃

Parameter	Symbol	Rating	Unit
Collector to base voltage	V_{CBO}	150	V
Collector to emitter voltage	V_{CEO}	60	V
Emitter to base voltage	V_{EBO}	5	V
Collector current	I_C	2	A
Peak collector current	I_{CP}	2.5	A
Collector power dissipation	P_C	18	W
Junction temperature	Tj	150	℃
Storage temperature	T_{stg}	-55 to +150	℃

Electrical Characteristics Ta = 25℃

Parameter	Symbol	Testconditons	Min	Typ	Max	Unit
Collector to base breakdown voltage	$V_{(BR)CBO}$	I_C = 1 mA, I_E = 0	150			V
Collector to emitter breakdown voltage	$V_{(BR)CEO}$	I_C = 10 mA, R_{BE} = ∞	60			V
Emitter to base breakdown voltage	$V_{(BR)EBO}$	I_E = 1 mA, I_C = 0	5			V
Collector cutoff current	I_{CBO}	V_{CB} = 100 V, I_E = 0			10	μA
DC current transfer ratio	h_{FE}	V_{CE} = 5 V,I_C = 1.5 A	150			
Collector to emitter saturation voltage	$V_{CE(sat)}$	I_C = 1.5 A,I_B = 0.05 A			0.8	V
Base to emitter saturation voltage	$V_{BE(sat)}$	I_C = 1.5 A,I_B = 0.05 A			1.3	V
Fall time	t_f	I_C = 1.5 A,I_B = -I_{B2} =50 mA			0.6	μs